BEARING SECTION

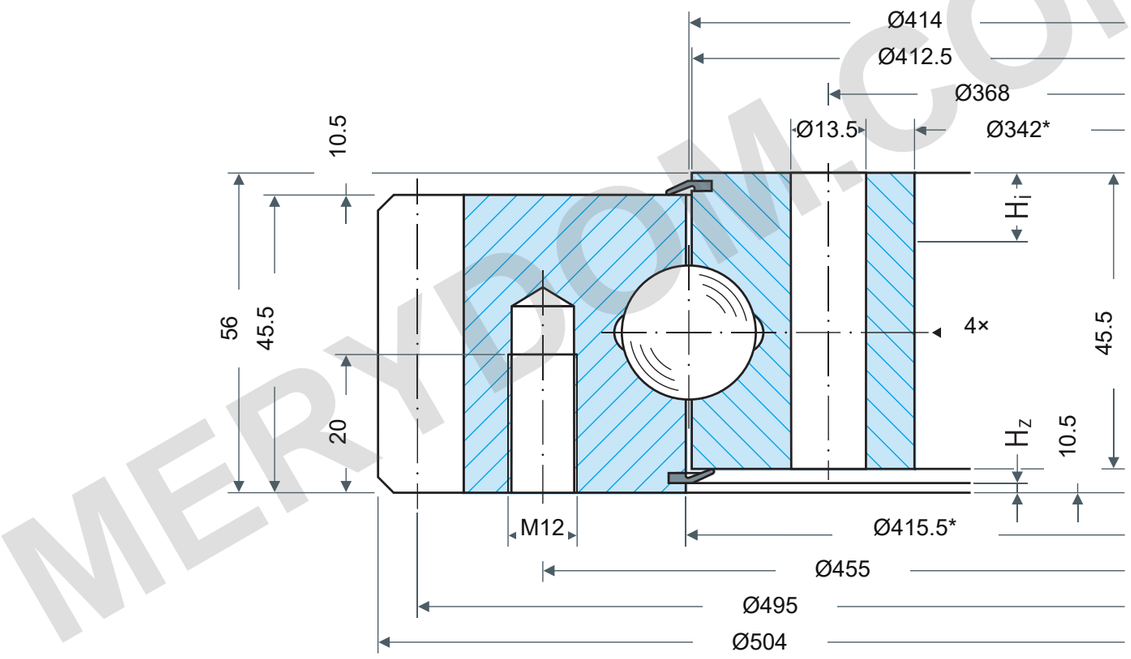

LOAD CAPACITY

Rothe Erde 061.20.0414.500.01.1503

Static boundary load curves

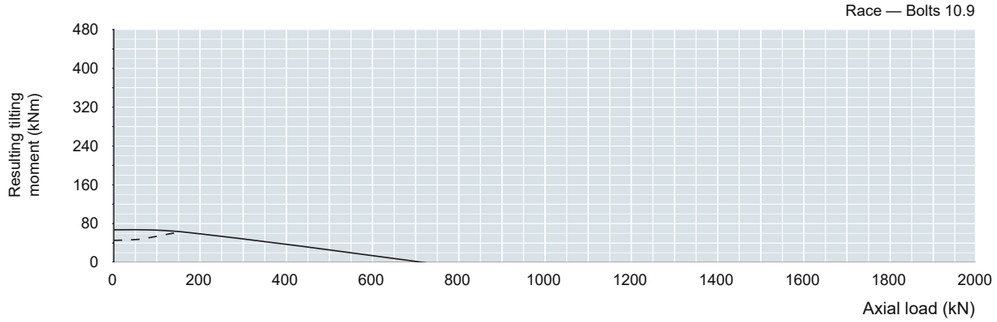

Utilization period — 30,000 revolutions

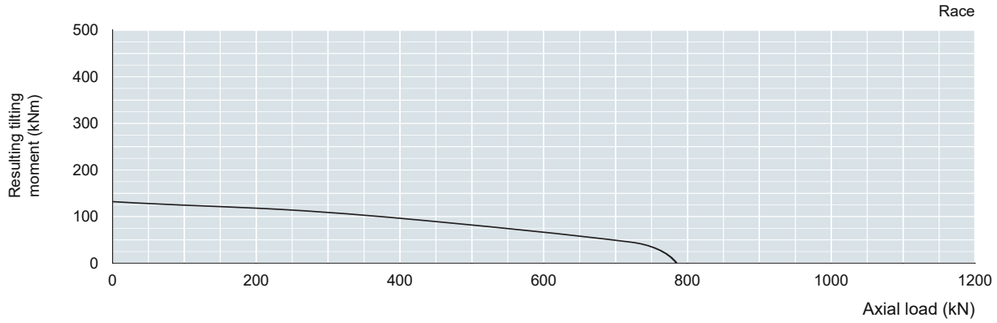

Raceway read-off loads require application factors: static fstat; utilization fL.
See source Table1, printed page61. Curve parameter:30,000 full-load rotations.
Application-specific factors are not selected here.

REFERENCE NOTES

Dimensions in mm. Reference drawing; do not scale.

Source: Rothe Erde EN1225; dimensions p62; load chart p62.

Da504/Di342*; DL414/O412.5/U415.5*; H56/H1H2b45.5/HoHu10.5; La455:20M12 t20; Li368:24Ø13.5; d495/m5/z99/k−.5; Yax≤.28/rad≤.24; 4AM10×1; *Hi10/Hz4.5 opt., mate≤9/3.5; Ø≤1000±2.5mm

Rothe Erde 061.20.0414.500.01.1503 — Product page | MERYDOM

MERYDOM
Single-row four-point ball bearing
061.20.0414.500.01.1503
REFERENCE: Rothe Erde /06
Rev1.0 | mm | NTS | 1/1

MERYDOM.COM