BEARING SECTION

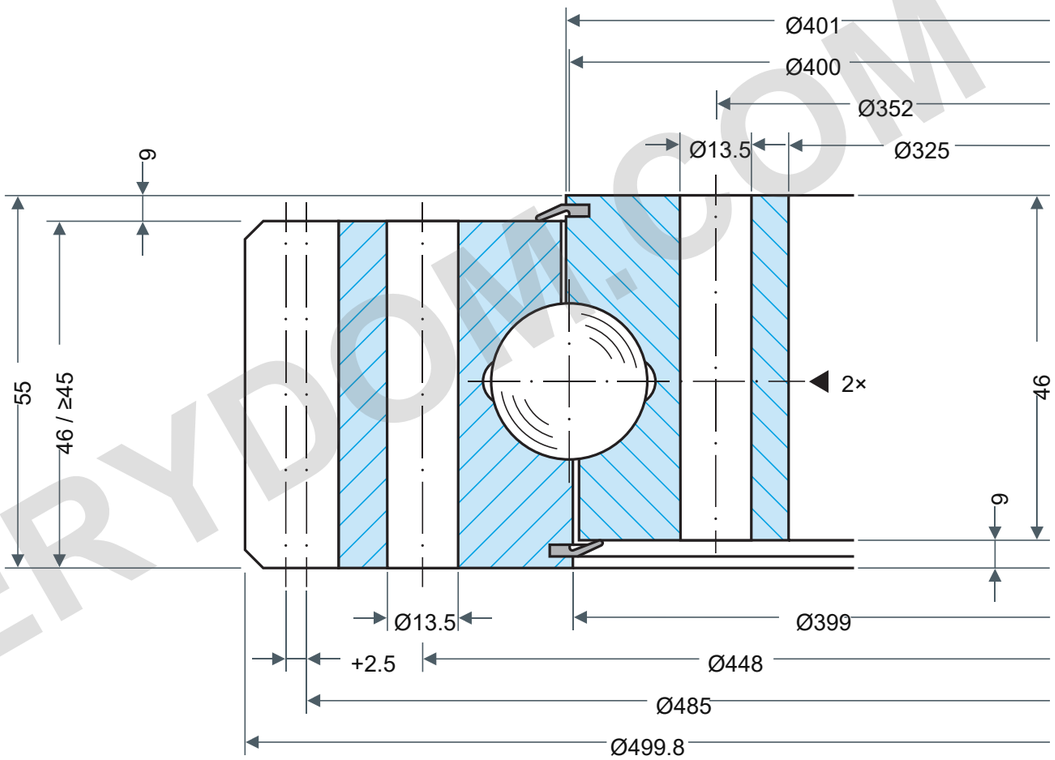

LOAD CAPACITY

Rothe Erde 061.20.0400.101.21.1503

Static boundary load curves

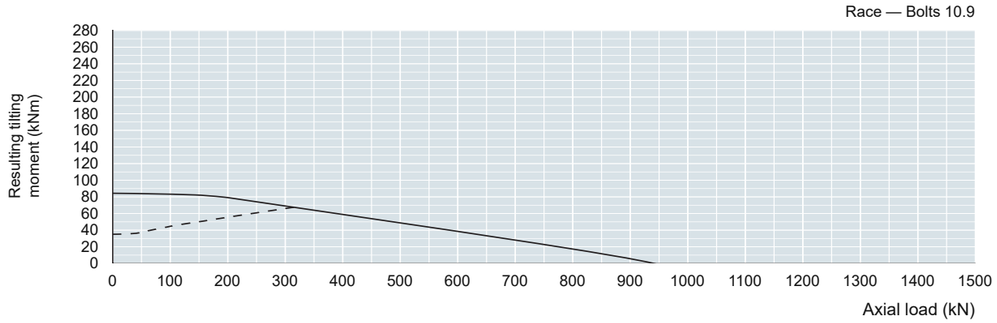

Utilization period — 30,000 revolutions

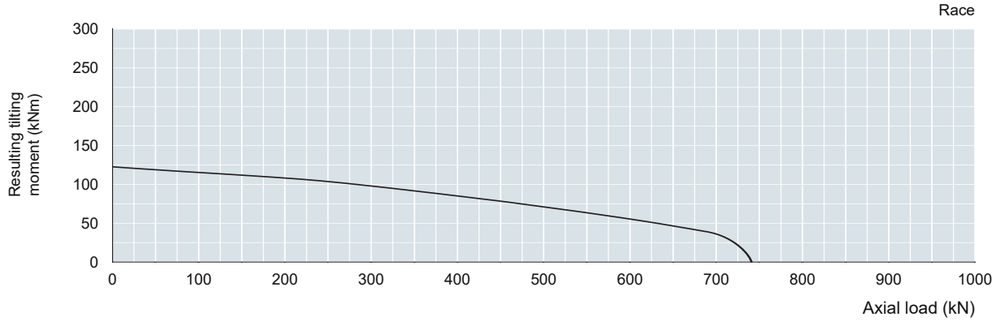

Raceway read-off loads require application factors: static fstat; utilization fL.

See source Table1, printed page61. Curve parameter:30,000 full-load rotations.

Application-specific factors are not selected here.

REFERENCE NOTES

Dimensions in mm. Reference drawing; do not scale.

Source: Rothe Erde EN1225; dimensions p74; load chart p74.

Da499.8/Di325;DL400/O401/U399;H55/46/46;Ho/Hu9;La448/Li352:16Ø13.5 through;boltM12;d485/m5/z97/x+2.5/k-0.5;bmin≥45;X1 21.74/X2 43.48kN;n1=2;Ø≤1000 ±2.5mm

Rothe Erde 061.20.0400.101.21.1503 — Product page | MERYDOM

MERYDOM
Single-row four-point ball bearing
061.20.0400.101.21.1503
REFERENCE: Rothe Erde /06
Rev1.0 | mm | NTS | 1/1

MERYDOM.COM