BEARING SECTION

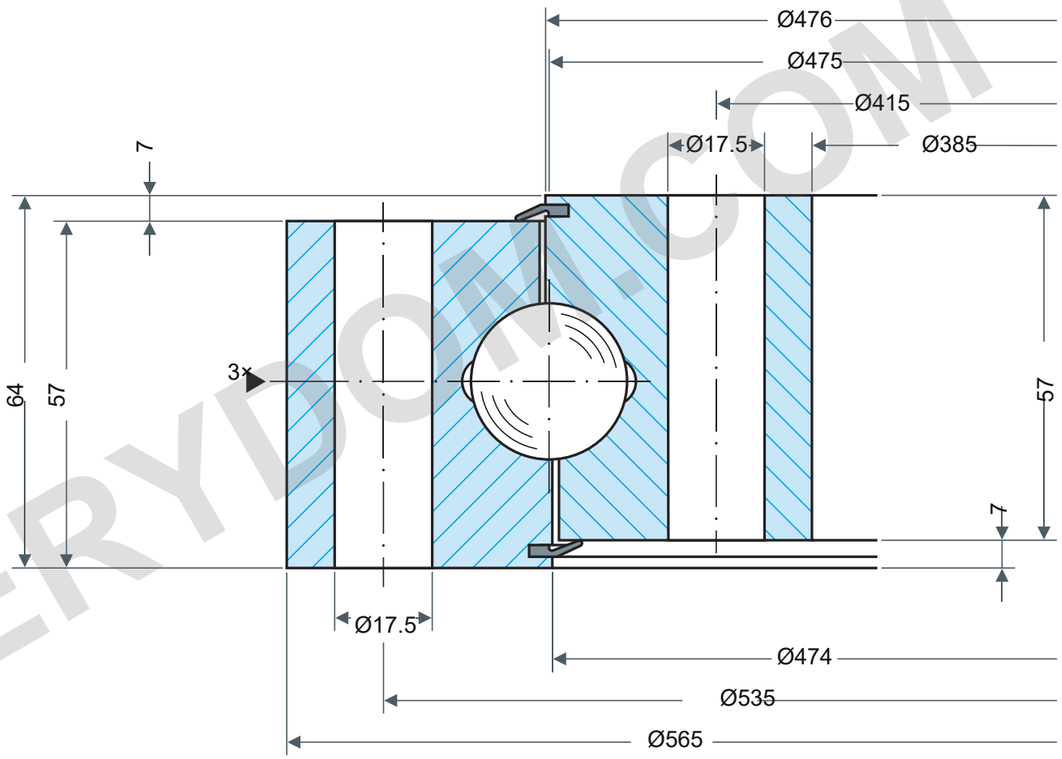

LOAD CAPACITY

Rothe Erde 060.25.0475.000.11.1504

Static boundary load curves

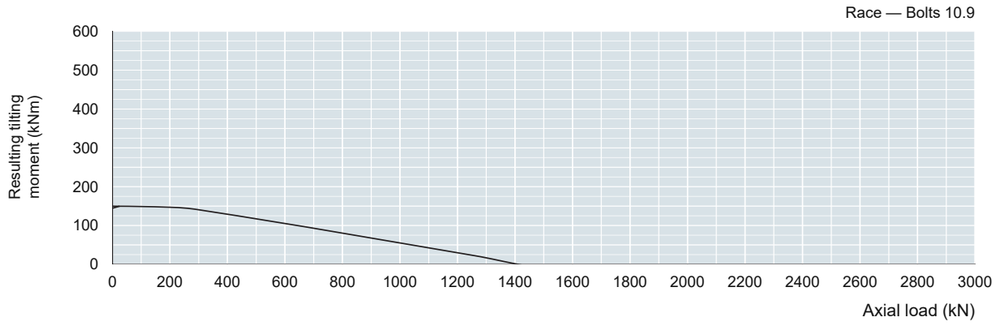

Utilization period — 30,000 revolutions

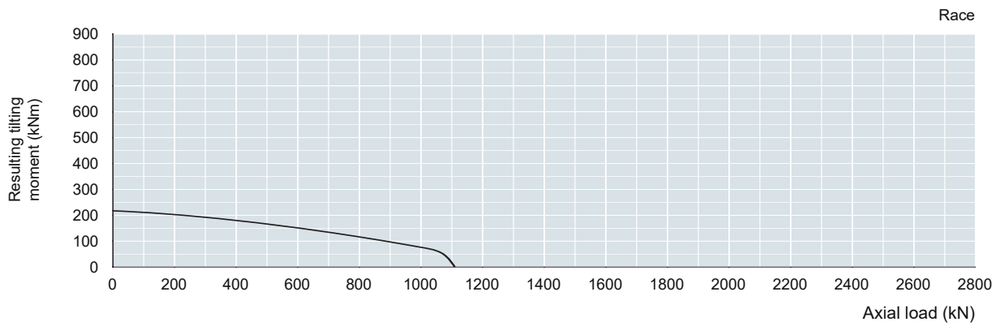

Raceway read-off loads require application factors: static fstat; utilization fL.

See source Table1, printed page61. Curve parameter:30,000 full-load rotations.

Application-specific factors are not selected here.

REFERENCE NOTES

Dimensions in mm. Reference drawing; do not scale.

Source: Rothe Erde EN1225; dimensions p60; load chart p60.

Da565; Di385; DL475; O476; U474; H64; H1/H2=57; Ho/Hu=7; La535/Li415; both30×Ø17.5 through; matching boltM16; untoleranced machined diameters≤1000:±2.5mm

Rothe Erde 060.25.0475.000.11.1504 — Product page | MERYDOM

MERYDOM
Single-row four-point ball bearing
060.25.0475.000.11.1504
REFERENCE: Rothe Erde /06
Rev1.0 | mm | NTS | 1/1

MERYDOM.COM