BEARING SECTION

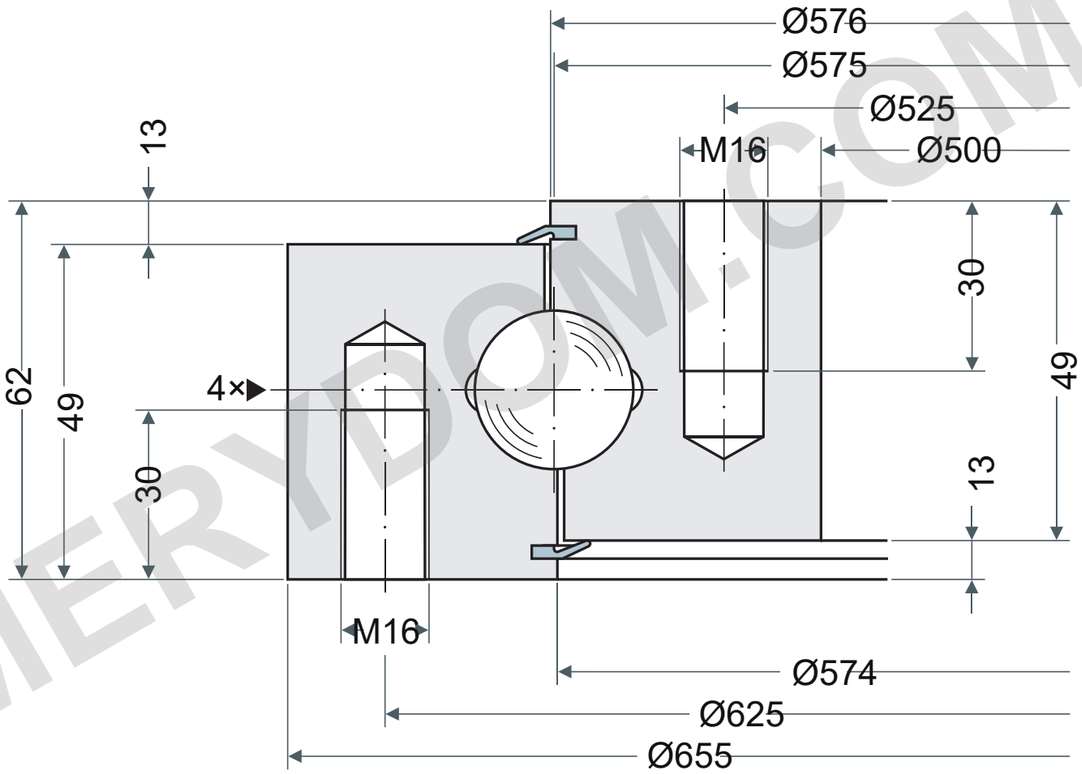

LOAD CAPACITY

Rothe Erde 060.22.0575.502.11.1503

Static boundary load curves

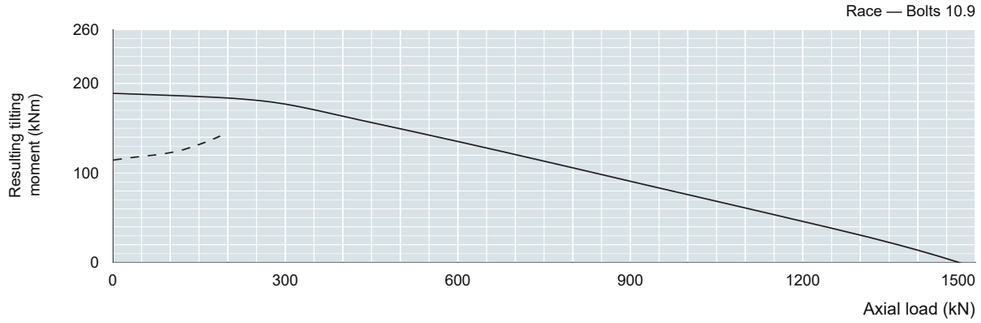

Utilization period — 30,000 revolutions

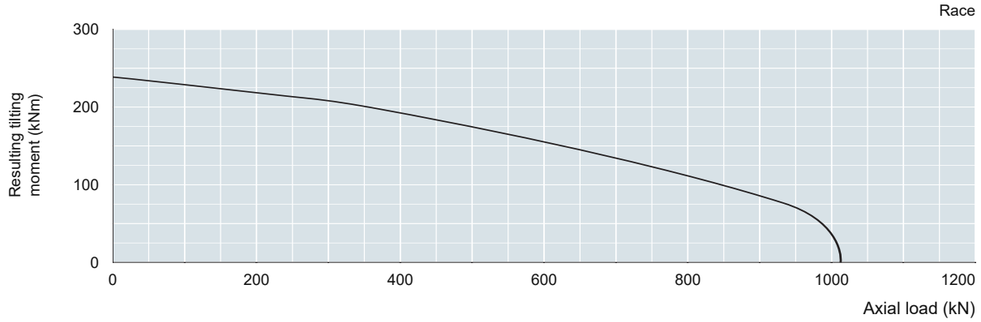

Raceway read-off loads require application factors: static fstat; utilization fL.

See source Table1, printed page61. Curve parameter:30,000 full-load rotations.

Application-specific factors are not selected here.

Outer lower / inner upper: M16, thread segment30 mm.

User reference1504: historical Rothe Erde ©2007, p.87.

REFERENCE NOTES

Dimensions in mm. Reference drawing; do not scale.

Source: Rothe Erde EN1225; dimensions p59; load chart p59.

Da655/Di500/DL575;O576/U574;H62;H1=H2=49;Ho=Hu=13;La625/12×M16×30;Li525/12×M16×30;n1=4

Rothe Erde 060.22.0575.502.11.1503 — Product page | MERYDOM

MERYDOM
Single-row four-point ball bearing
060.22.0575.502.11.1503
REFERENCE: Rothe Erde /06
Rev1.0 | mm | NTS | 1/1

MERYDOM.COM