BEARING SECTION

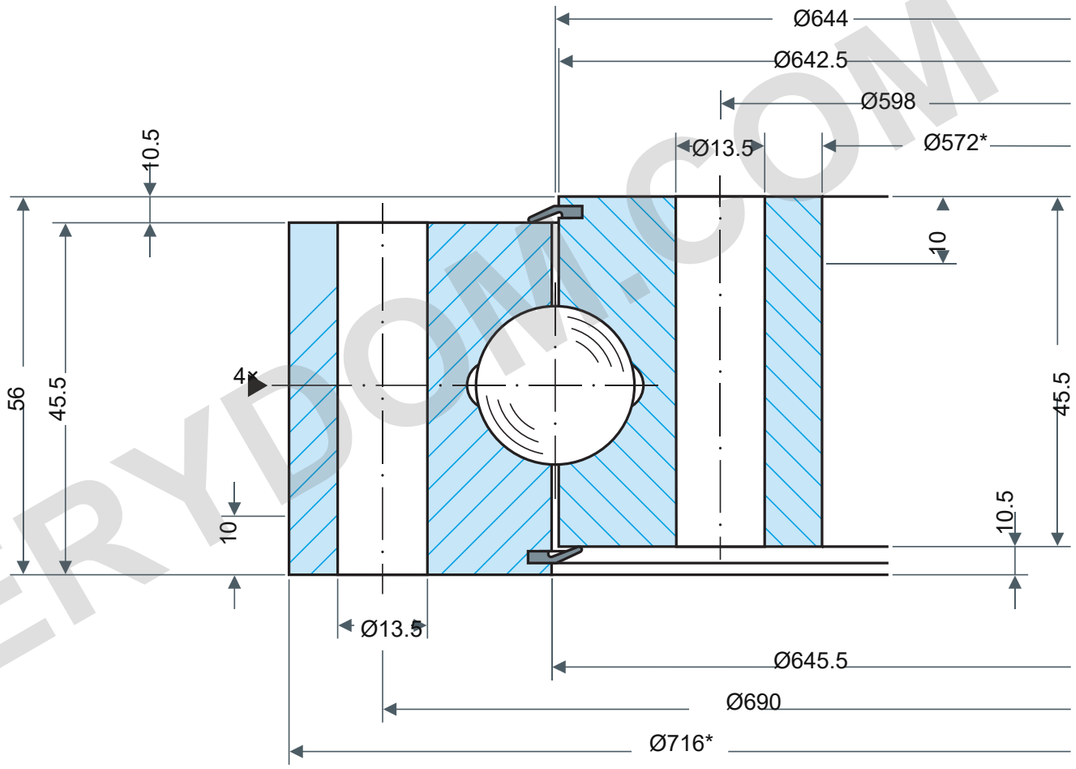

LOAD CAPACITY

Rothe Erde 060.20.0644.500.01.1503

Static boundary load curves

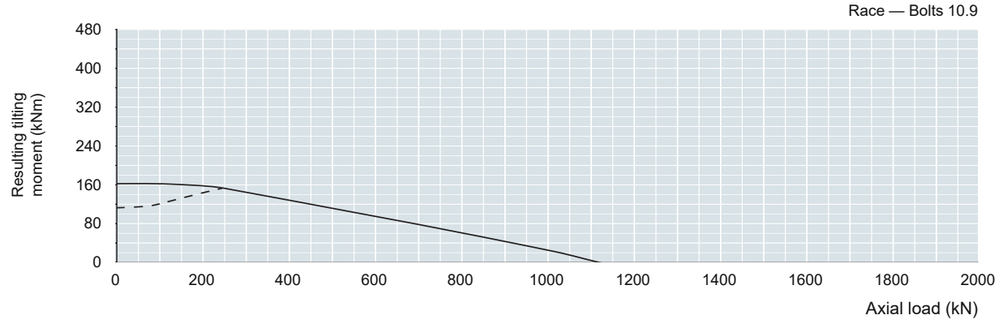

Utilization period — 30,000 revolutions

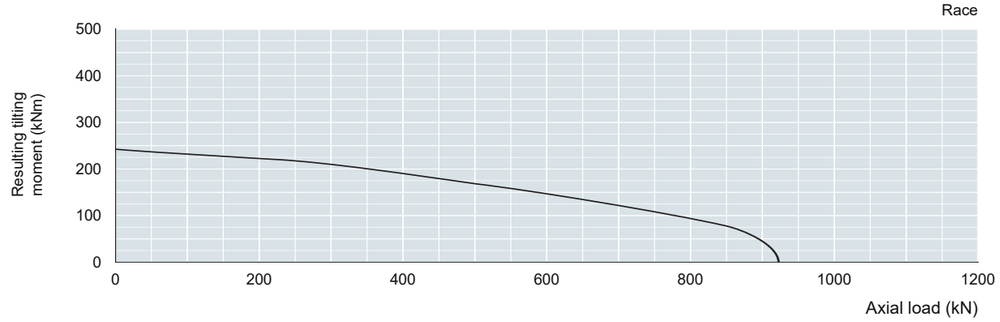

Raceway read-off loads require application factors: static fstat; utilization fL.
See source Table1, printed page61. Curve parameter:30,000 full-load rotations.
Application-specific factors are not selected here.

REFERENCE NOTES

Dimensions in mm. Reference drawing; do not scale.

Source: Rothe Erde EN1225; dimensions p61; load chart p61.

Da716*/Di572*; DL644/O642.5/U645.5; H56/H1H2 45.5/HoHu10.5; La690/Li598; 36×Ø13.5/ring; M12; Yax≤ 0.30/rad≤ 0.26; 4×AM10×1; *HA/Hi10, companion≤9 optional; Ø≤1000:±2.5mm

Rothe Erde 060.20.0661.500.01.1503 — Product page | MERYDOM

MERYDOM
Single-row four-point ball bearing
060.20.0644.500.01.1503
REFERENCE: Rothe Erde /06
Rev1.0 | mm | NTS | 1/1

MERYDOM.COM