## BEARING SECTION

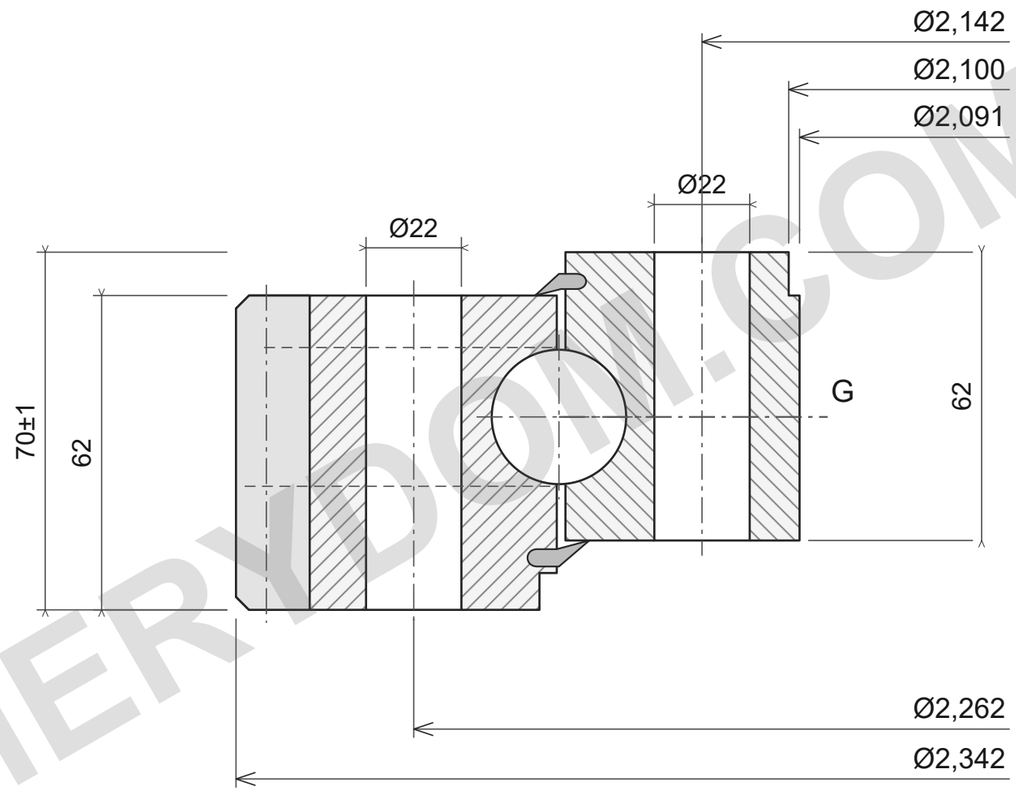


36 × Ø22; 36 × Ø22

m8; z290; W62

## LOAD CAPACITY

ROLLIX 01-2202-00

Catalogue limits; supported loads, class10.9.

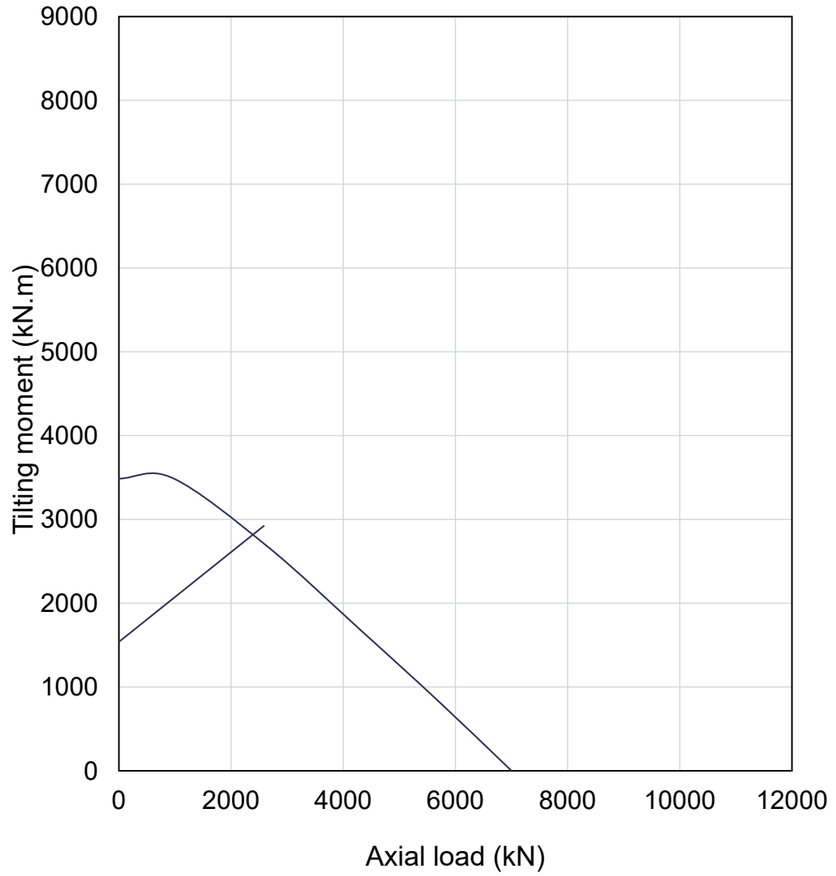


## REFERENCE NOTES

Dimensions in mm. Reference drawing; do not scale.

Source: ROLLIX July2024; dimensions p70; load chart p70.

Ø2342; Ø2091; Ø2,100; 70±1; 62; 62; Ø2262/36×Ø22; Ø2142/36×Ø22; m8; z290; W62

ROLLIX 01-2202-00 — Product page | MERYDOM

| MERYDOM |
| --- |
| Single-row four-point contact ball slewing bearing |
| **01-2202-00** |
| REFERENCE: ROLLIX /01 |
| Rev3.0 \| mm \| NTS \| 1/1 |

MERYDOM.COM