BEARING SECTION

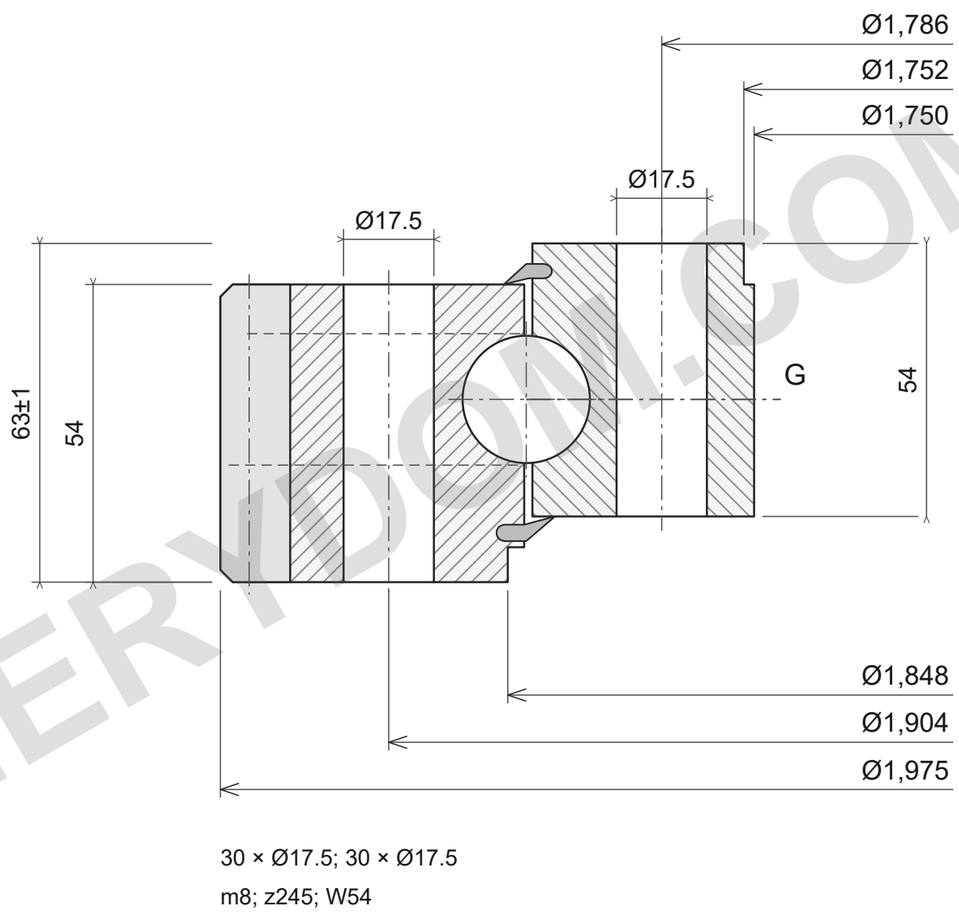

30 × Ø17.5; 30 × Ø17.5

m8; z245; W54

LOAD CAPACITY

ROLLIX 01-1845-02

Catalogue limits; supported loads, class10.9.

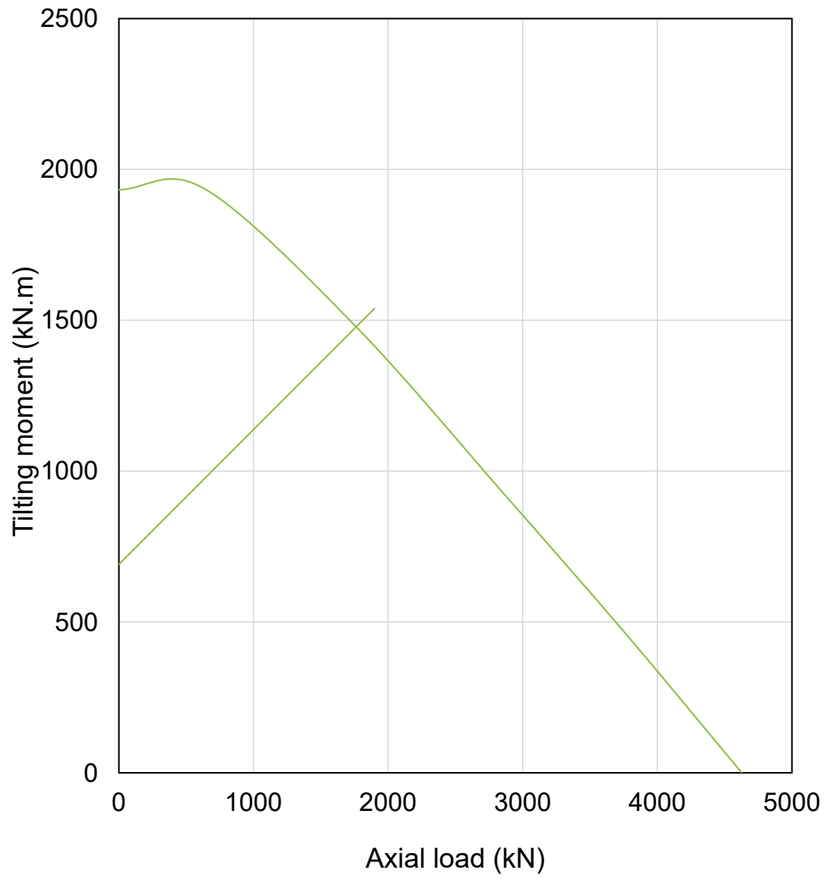

REFERENCE NOTES

Dimensions in mm. Reference drawing; do not scale.

Source: ROLLIX July2024; dimensions p69; load chart p69.

Ø1975; Ø1750; Ø1848; Ø1752; 63±1; 54; 54; Ø1904/30×Ø17.5; Ø1786/30×Ø17.5; m8; z245; W54; I/R; M10×1.00

ROLLIX 01-1845-02 — Product page | MERYDOM

MERYDOM
Single-row four-point contact ball slewing bearing
01-1845-02
REFERENCE: ROLLIX /01
Rev3.0 | mm | NTS | 1/1

MERYDOM.COM