BEARING SECTION

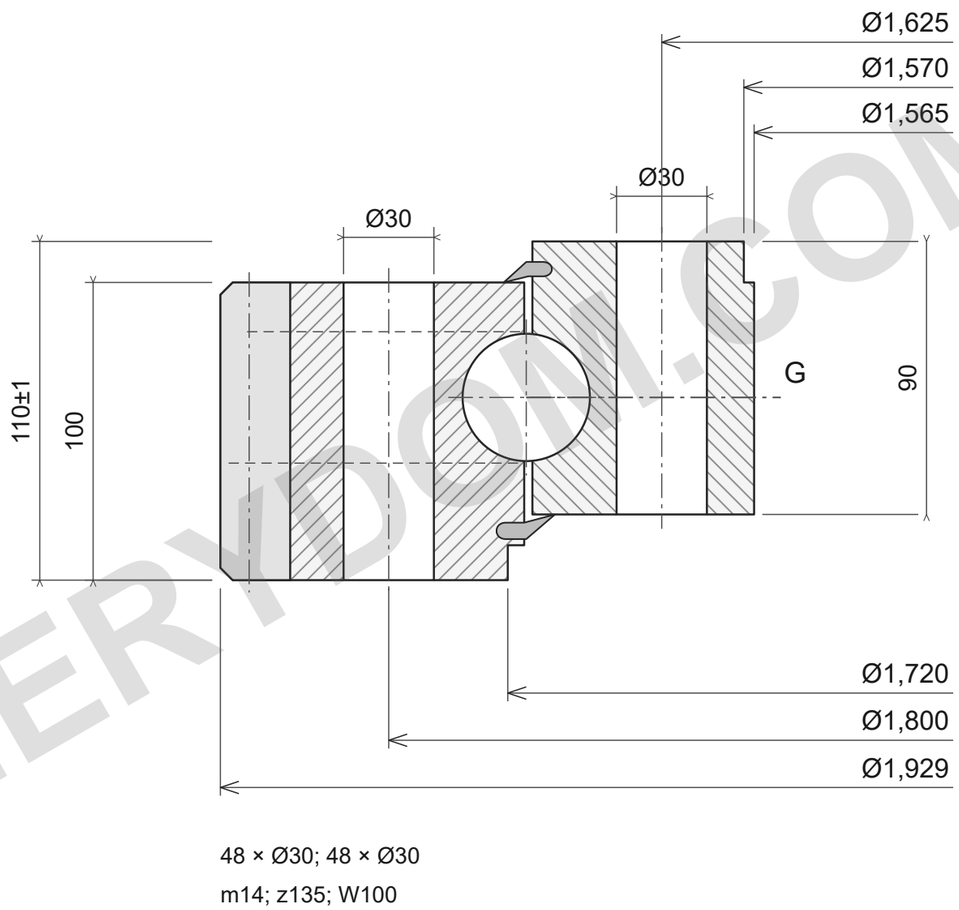

48 × Ø30; 48 × Ø30

m14; z135; W100

LOAD CAPACITY

ROLLIX 01-1712-00

Catalogue limits; supported loads, class10.9.

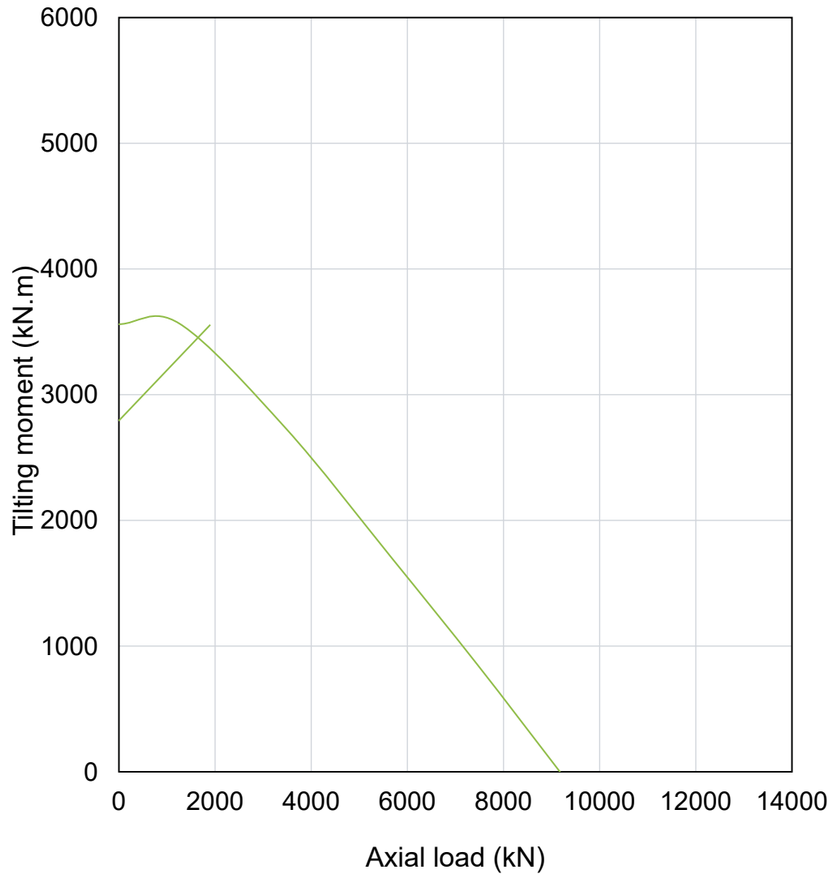

REFERENCE NOTES

Dimensions in mm. Reference drawing; do not scale.

Source: ROLLIX July2024; dimensions p67; load chart p67.

Ø1929; Ø1565; Ø1720; Ø1570; 110±1; 100; 90; Ø1800/48×Ø30; Ø1625/48×Ø30; m14; z135; W100; I/R; M10×1.00

ROLLIX 01-1712-00 — Product page | MERYDOM

MERYDOM
Single-row four-point contact ball slewing bearing
01-1712-00
REFERENCE: ROLLIX /01
Rev3.0 | mm | NTS | 1/1

MERYDOM.COM