BEARING SECTION

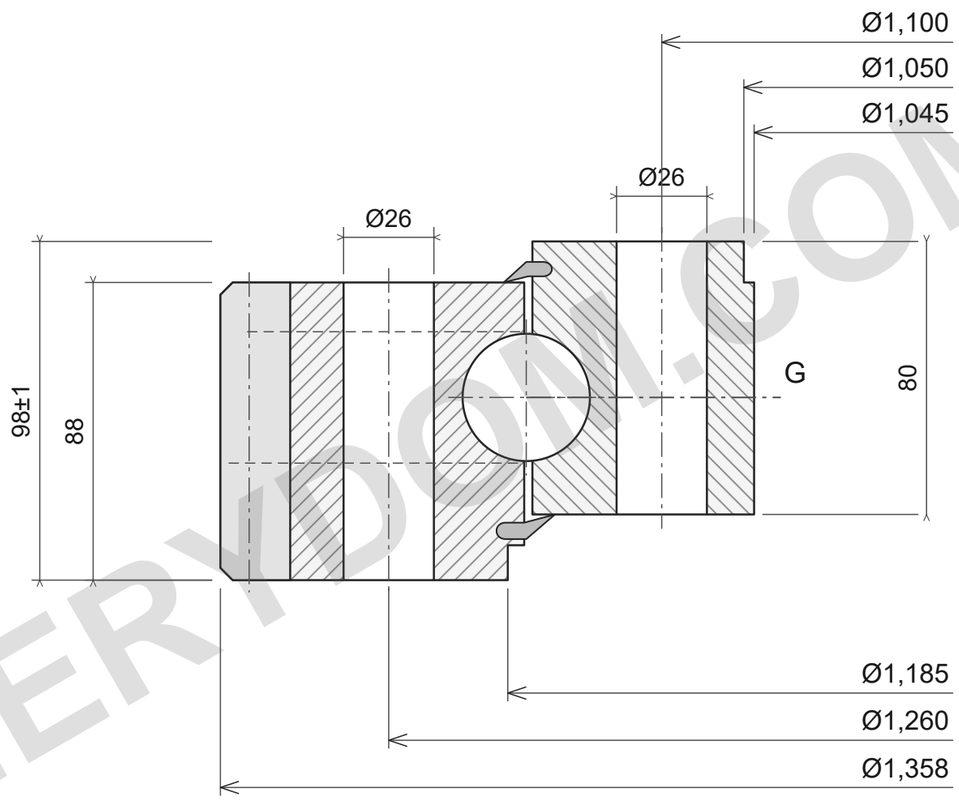

40 × Ø26; 40 × Ø26

m10; z133; W88

LOAD CAPACITY

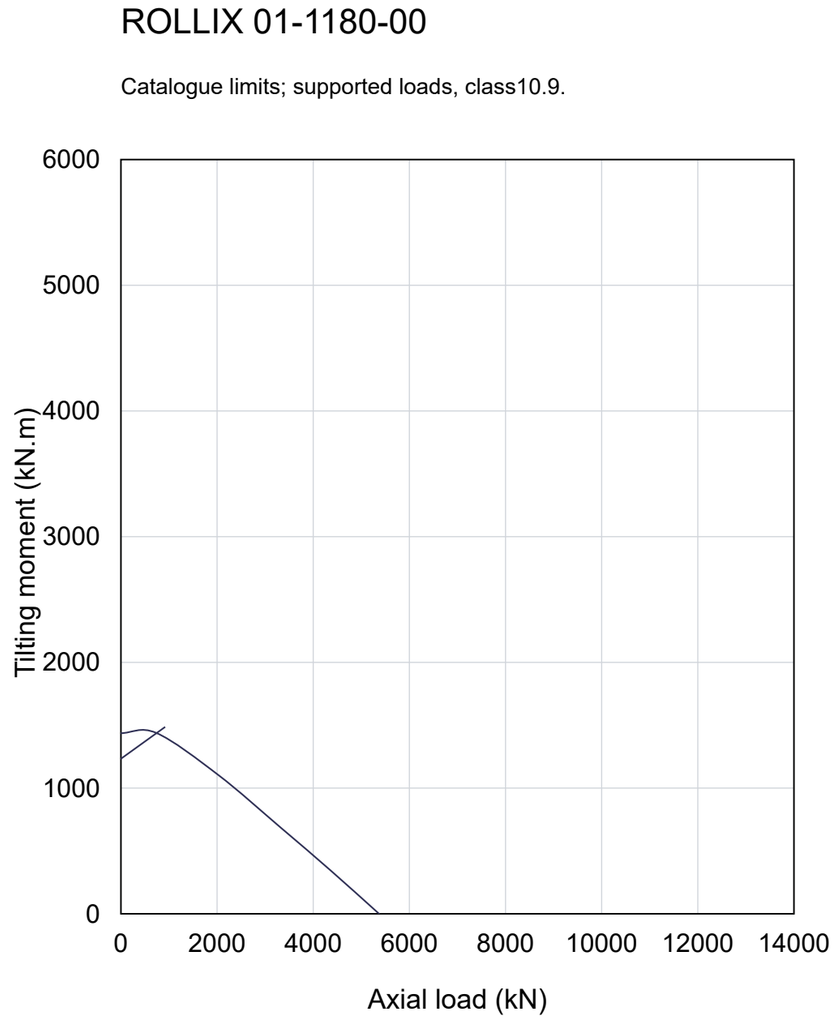

REFERENCE NOTES

Dimensions in mm. Reference drawing; do not scale.

Source: ROLLIX July2024; dimensions p67; load chart p67.

Ø1358; Ø1045; Ø1185; Ø1050; 98±1; 88; 80; Ø1260/40×Ø26; Ø1100/40×Ø26; m10; z133; W88; I/R; M10×1.00

ROLLIX 01-1180-00 — Product page | MERYDOM

MERYDOM
Single-row four-point contact ball slewing bearing
01-1180-00
REFERENCE: ROLLIX /01
Rev3.0 | mm | NTS | 1/1

MERYDOM.COM