BEARING SECTION

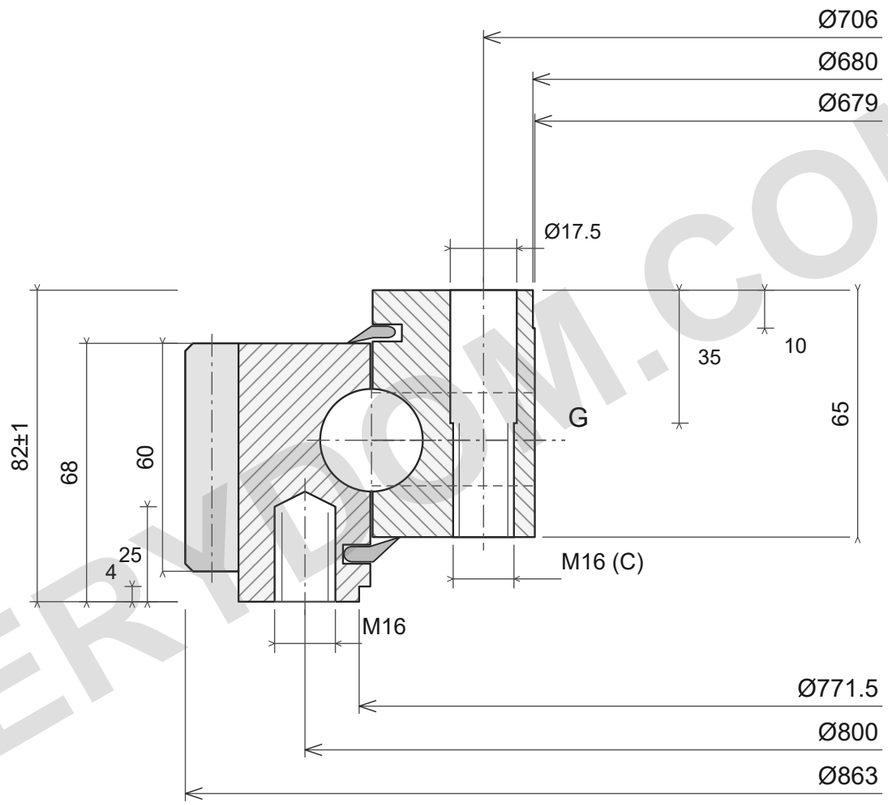

24 × M16 (Bd); 24 × M16 (C)

m6; z142; W60

LOAD CAPACITY

ROLLIX 01-0765-01 -ZZ0-0

Catalogue limits; supported loads, class10.9.

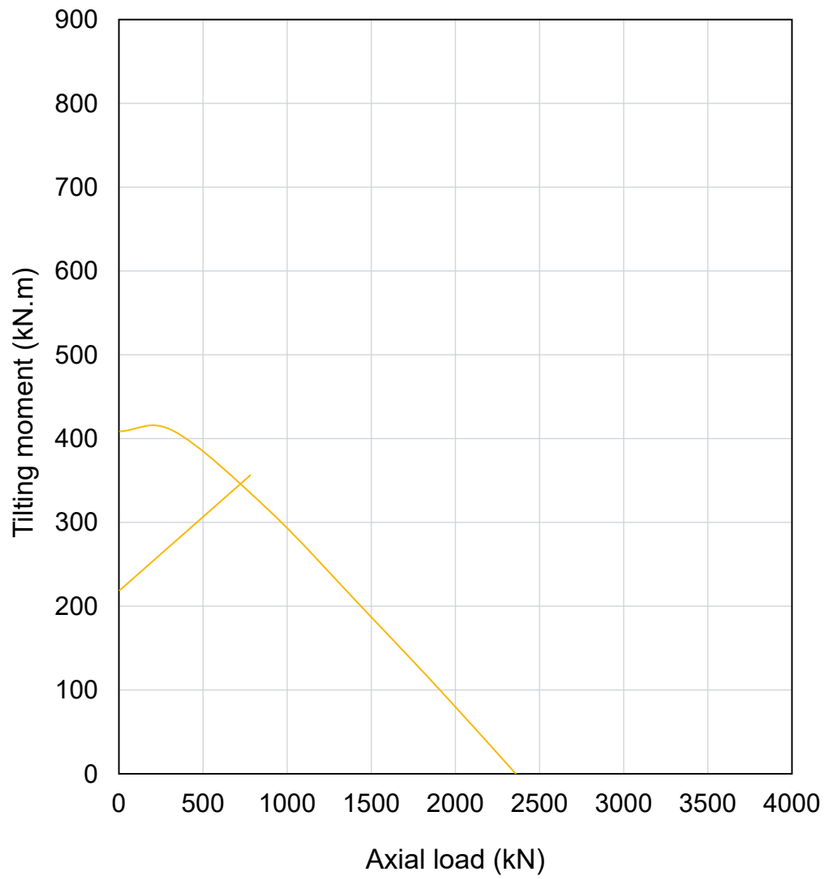

REFERENCE NOTES

Dimensions in mm. Reference drawing; do not scale.

Source: ROLLIX July2024; dimensions p66; load chart p66.; section supplement: historical PDF 134

Ø863; Ø679; Ø771.5; Ø680; 82±1; 68; 65; Ø800/24×M16 Bd; Ø706/24×M16 C; m6; z142; W60; I/R; M10×1.00

ROLLIX 01-0765-01 — Product page | MERYDOM

MERYDOM
Single-row four-point contact ball slewing bearing
01-0765-01
REFERENCE: ROLLIX /01
Rev3.0 | mm | NTS | 1/1

MERYDOM.COM