BEARING SECTION

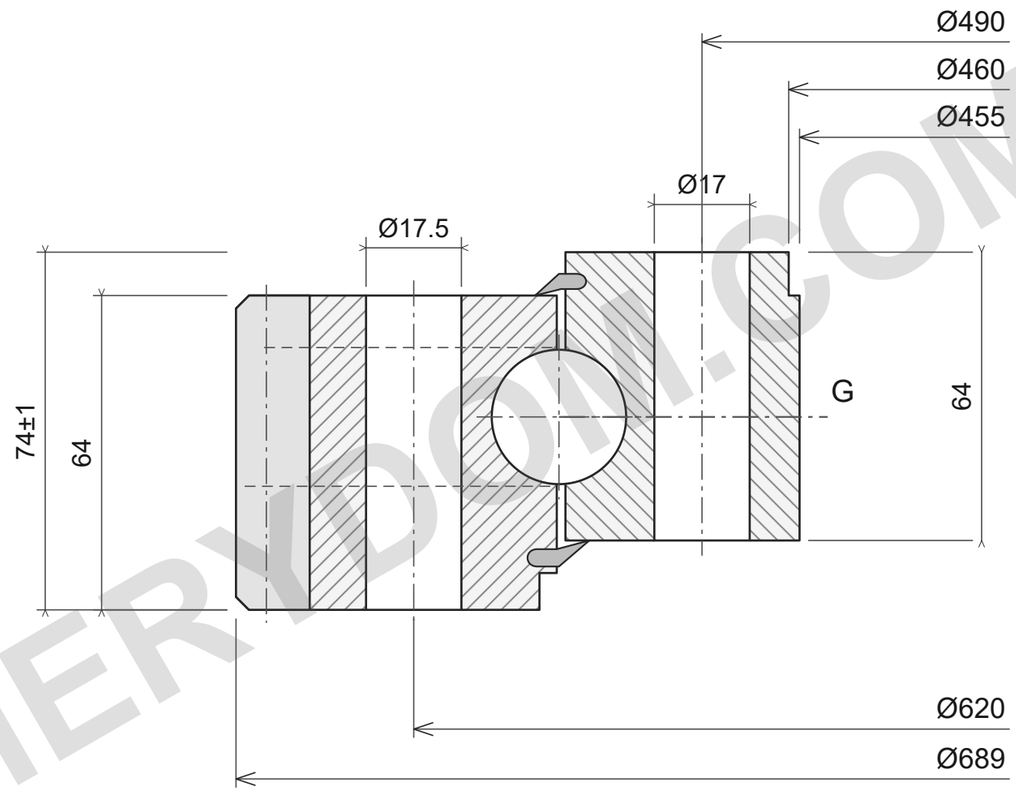

30 × Ø17.5; 30 × Ø17

m6; z112; W60

LOAD CAPACITY

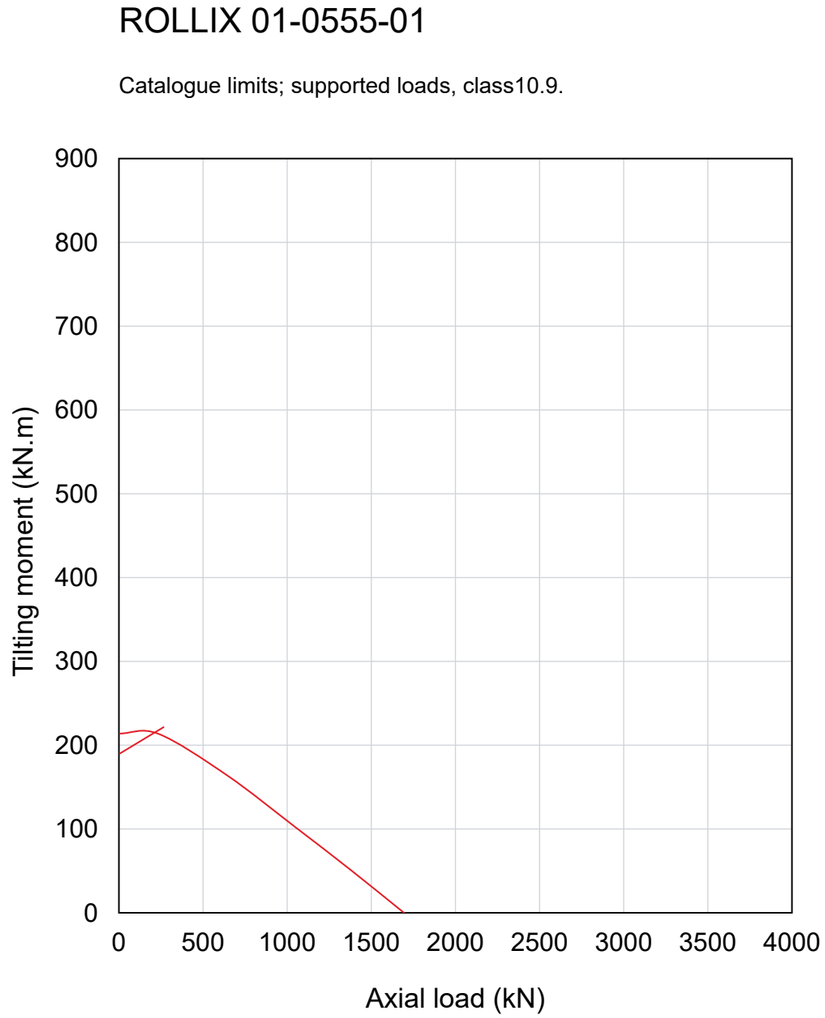

REFERENCE NOTES

Dimensions in mm. Reference drawing; do not scale.

Source: ROLLIX July2024; dimensions p66; load chart p66.

Ø689; Ø455; Ø460; 74±1; 64; 64; Ø620/30×Ø17.5; Ø490/30×Ø17; m6; z112; W60; I/R; M10×1.00

ROLLIX 01-0555-01 — Product page | MERYDOM

MERYDOM
Single-row four-point contact ball slewing bearing
01-0555-01
REFERENCE: ROLLIX /01
Rev3.0 | mm | NTS | 1/1

MERYDOM.COM